PARA LIGHT ELECTRONICS CO., LTD.
11F., No. 8, Jiankang Rd., Zhonghe Dist., New Taipei City 235, Taiwan,
Tel: 886-2-2225-3733 Fax: 886-2-2225-4800
E-mail: para@para.com.tw http://www.para.com.tw

DATA SHEET

PART NO. : DSA33LY064G

REV : A / 1

CUSTOMER'S APPROVAL : _____ DCC : _____

DRAWING NO. : DS-13-18-0080G DATE : 2025-11-05

PACKAGE DIMENSIONS

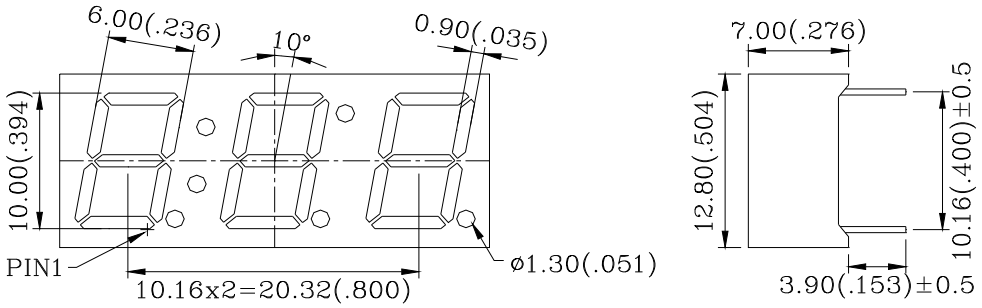

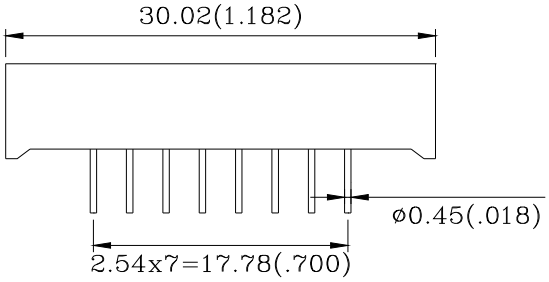

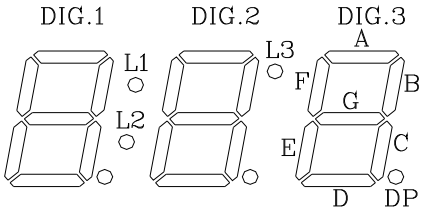

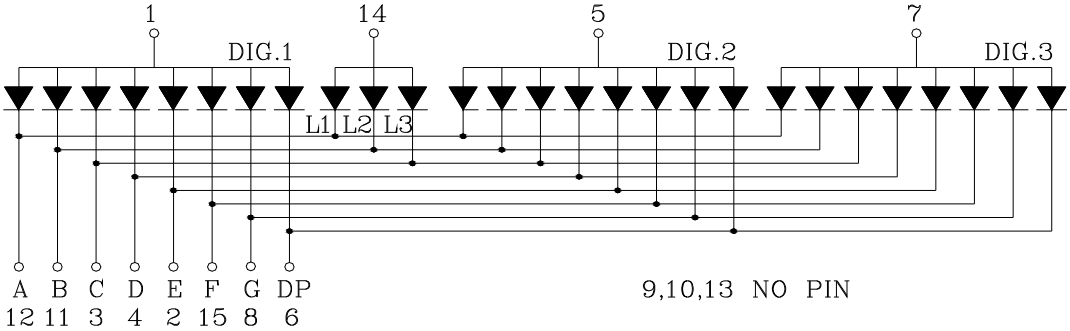

NOTES : 1. All dimensions are in millimeters. (inches)

2. Tolerance is ± 0.25(0.010") unless otherwise specified.

FEATURES

- ∗ 10.00mm (0.39 inch) DIGIT HEIGHT
- ∗ COMMON ANODE
- ∗ LOW POWER CONSUMPTION
- ∗ Pb FREE PRODUCTS
- ∗ GRAY FACE, WHITE SEGMENTS
- ∗ ROHS COMPLIANCE

Raw Material : AlInGaP/GaAs

ABSOLUTE MAXIMUM RATING : (Ta = 25°C)

SYMBOL	PARAMETER	ULTRA RED	UNIT
P_D	Power Dissipation Per Segment	60	mW
V_R	Reverse Voltage Per Segment	5	V
I_{AF}	Continuous Forward Current Per Segment	25	mA
I_{PF}	Peak Forward Current Per Segment (1/10 Duty Cycle,0.1ms Pulse Width)	85	mA
Topr	Operating Temperature Range	- 35°C to 85°C	
Tstg	Storage Temperature Range	- 35°C to 85°C	
Solder Temperature 1/16 inch Below Seating Plane for 5 Seconds at 260°C			

ELECTRO-OPTICAL CHARACTERISTICS : (Ta = 25°C)

SYMBOL	PARAMETER	TEST CONDITION	MIN.	TYP.	MAX.	UNIT
V_F	Forward Voltage , Per Segment	I_F = 20mA		2.1	2.4	V
I_R	Reverse Current , Per Segment	V_R = 5V			10	μA
λ_P	Peak Emission Wavelength	I_F = 20mA		595		nm
λ_D	Dominant Wavelength	I_F = 20mA		588		nm
$\Delta\lambda$	Spectral Line Half - Width	I_F = 20mA		20		nm
I_V	Luminous Intensity Per Segment	I_F = 10mA	4.0	10.0		mcd

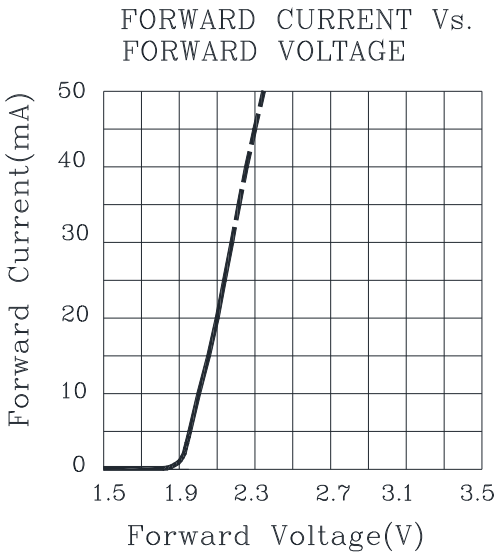
FORWARD CURRENT Vs.
FORWARD VOLTAGE
Forward Current(mA)
50
40
30
20
10
0
1.5
1.9
2.3
2.7
3.1
3.5
Forward Voltage(V)

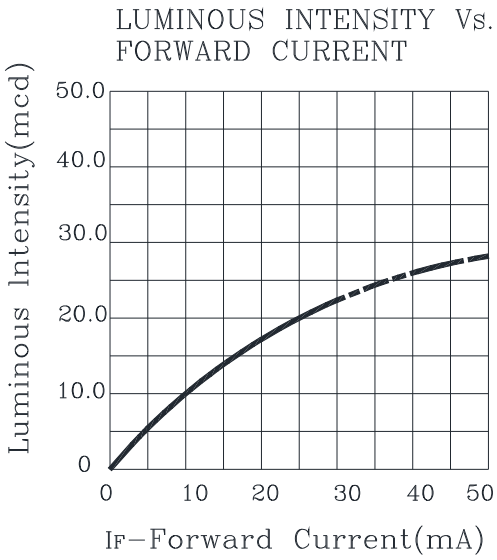
LUMINOUS INTENSITY Vs.
FORWARD CURRENT
Luminous Intensity(mcd)
50.0
40.0
30.0
20.0
10.0
0
0
10
20
30
40
50
IF−Forward Current(mA)

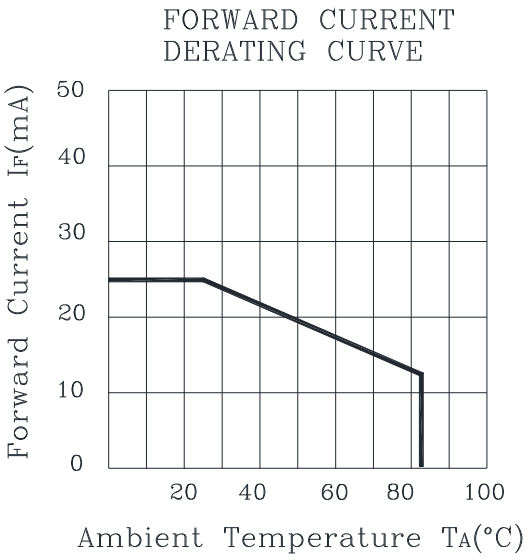
FORWARD CURRENT
DERATING CURVE
Forward Current IF(mA)
50
40
30
20
10
0
20
40
60
80
100
Ambient Temperature TA(°C)

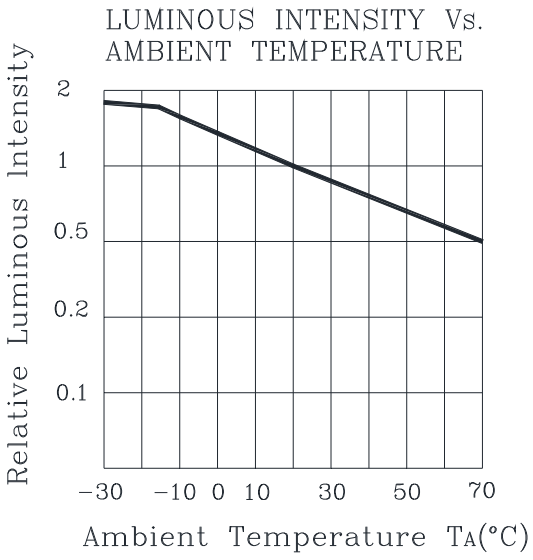
LUMINOUS INTENSITY Vs.
AMBIENT TEMPERATURE
Relative Luminous Intensity
2
1
0.5
0.2
0.1
−30
−10
0
10
30
50
70
Ambient Temperature TA(°C)

•SOLDERING

METHOD	SOLDERING CONDITIONS	REMARK
DIP SOLDERING	Bath temperature: 260˚C max Immersion time: within 5 sec	• Solder no closer than 2mm from the base of the package • Using soldering flux," RESIN FLUX" is recommended.
SOLDERING IRON	Soldering iron: 30W or smaller Temperature at tip of iron: 260℃ or lower Soldering time: within 5 sec.	• During soldering, take care not to press the tip of iron against the PIN. (To prevent heat from being transferred directly to the PIN.)

1) When soldering the PIN of Display in a jig that the package is fixed with a panel (See flg.1), be careful not to stress the PIN with iron tip. When soldering Display in a condition that the package is fixed with a panel, be careful not to cling and stress the surface of Display on the panel to avoid damaging the Display.

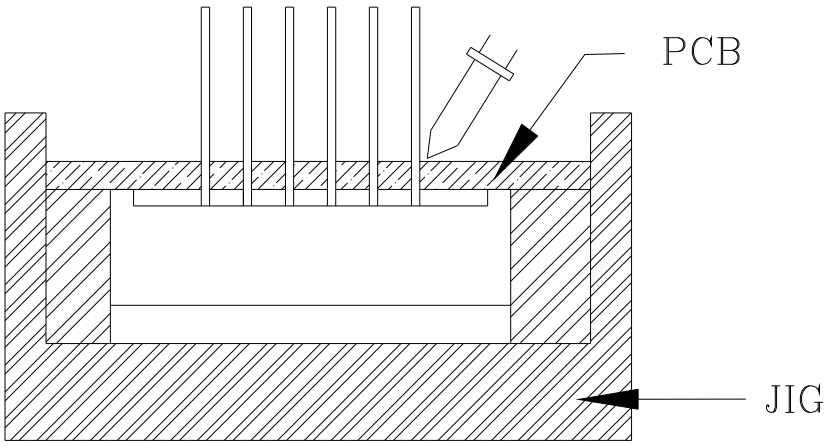

Fig.1

Regarding solution in the tinning oven for product-tinning, compound sub-solution made of tin & copper and silver is proposed with the temperature of Celsius 260. The proportion of the alloyed solution is tin 95.5: copper 3.5: silver 0.5 by percentage. The time of tinning is constantly 3 seconds.

2) Similarly, when a jig is used to solder the Display to PC board, take care as much as possible to avoid steering the PIN (See Fig.2).

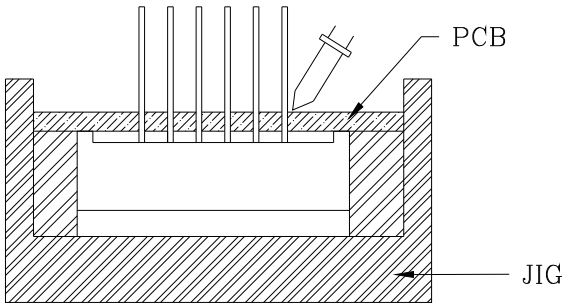

Fig.2

3) Repositioning after soldering should be avoided as much as possible. If inevitable, be sure to preserve the soldering conditions with irons stated above: select a best-suited method that assures the least stress to the Display.
4) PIN cutting after soldering should be performed only after the Display temperature has returned to normal temperature.

•LED MOUNTING METHOD

1) When mounting the Display by using a case, as shown Fig.3, ensure that the mounting holds on the PC board match the pitch of the PIN correctly-tolerance of dimensions of the respective components including the Display should be taken into account especially when designing the case, PC board, etc. to prevent pitch misalignment between the PIN and board holes, the diameter of the board holes should be slightly larger than the size of the PIN. Alternatively, the shape of the holes should be made oval. (See Fig.3)

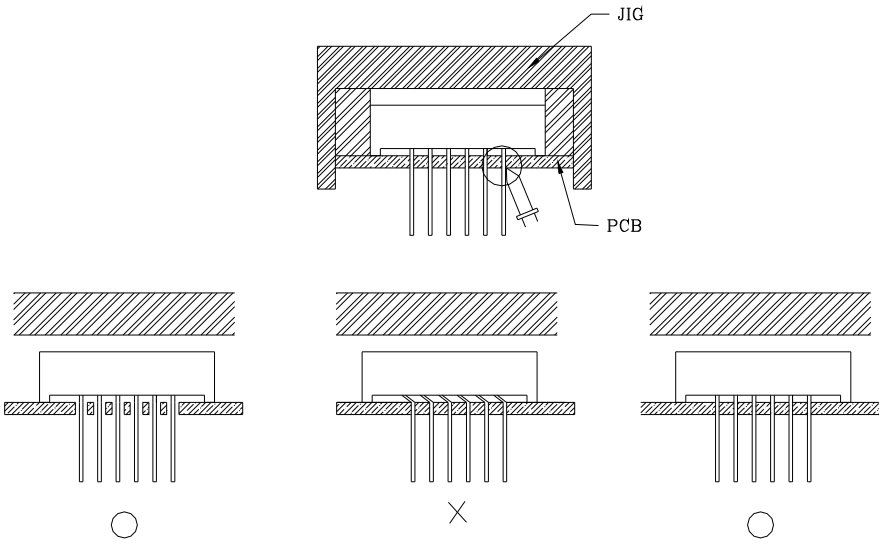

Fig.3

2) Use Display with holder made of resin (Fig.4) to position the PIN.

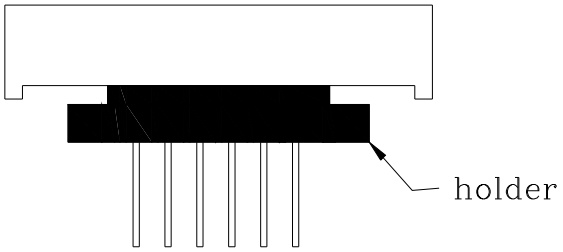

Fig.4

•FORMED LEAD

1) The PIN should be bent at a point located at least 2mm away from the package. Bending should be performed with base fixed means of a jig or pliers (Fig.5)

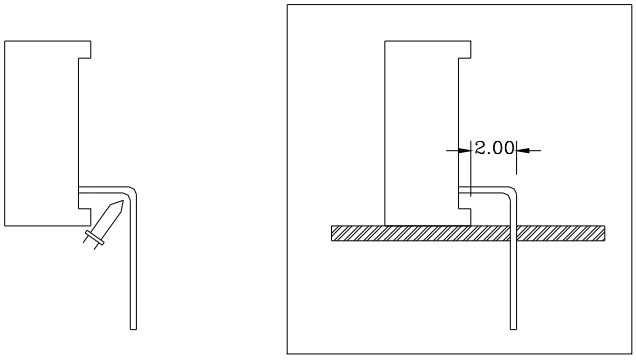

Fig.5

2) Forming PIN should be carried our prior to soldering and never during or after soldering.
3) Form the PIN to ensure alignment between the PIN and the hole on board, so that stress against the Display is prevented. (Fig.6)

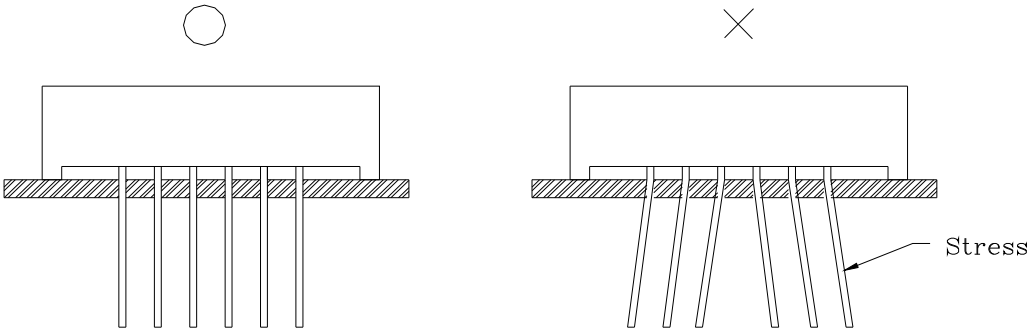

Fig.6

•LEAD STRENGTH

1) Bend strength
   Do not bend the PIN more than twice. (Fig.7)

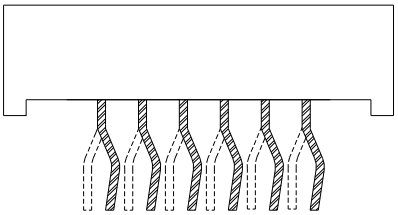

Fig.7

2) Tensile strength (@Room Temperature)
   If the force is 1kg or less, there will be no problem. (Fig.8)

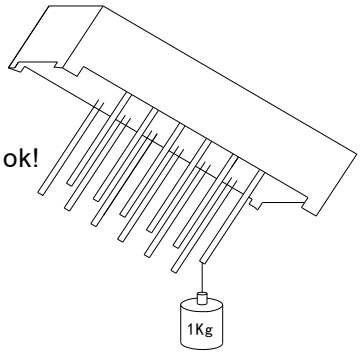

Fig.8

•HANDLING PRECAUTIONS

Although rigid against vibration, the Display may damaged or scratched if dropped. So take care when handling.

• STORAGE

1) PARA Display lead frames are comprised of a stannum plated iron alloy. The silver surface may be affected by environments which contain corrosive gases and so on. Please avoid conditions which may cause the Display to corrode, tarnish or discolor. This corrosion or discoloration may cause difficulty during soldering operations. It is recommended that the Display be used as soon as possible.
2) Please avoid rapid transitions in ambient temperature, especially, in high humidity environments where condensation can occur.

• HEAT GENERATION

1) Thermal design of the end product is of paramount importance. Please consider the heat generation of the Display when making the system design. The coefficient of temperature increase per input electric power is affected by the thermal resistance of the circuit board and density of Display placement on the board, as well as other components. It is necessary to avoid intense heat generation and operate within the maximum ratings given in this specification.
2) The operating current should be decided after considering the ambient maximum temperature of Display .

•OTHERS

1) Care must be taken to ensure that the reverse voltage will not exceed the absolute maximum rating when using the Display with matrix drive.
2) Flashing lights have been known to cause discomfort in people; you can prevent this by taking precautions during use. Also, people should be cautious when using equipment that has had Display incorporated into it.
3) The Display described in this brochure are intended to be used for ordinary electronic equipment (such as office equipment, communications equipment, measurement instruments and household appliances). Consult PARA's sales staff in advance for information on the applications in which exceptional quality and reliability are required , particularly when the failure or malfunction of the Display may directly jeopardize life or health (such as for airplanes, aerospace, submersible repeaters, nuclear reactor control systems, automobiles, traffic control equipment, life support systems and safety devices).
4) User shall not reverse engineer by disassembling or analysis of the Display without having prior written consent from PARA. When defective Display are found, the User shall inform PARA directly before disassembling or analysis.
5) The formal specifications must be exchanged and signed by both parties before large volume purchase begins.
6) The appearance and specifications of the product may be modified for improvement without notice.